S.C TehnoWorld SRL

Loc. Baia, nr. 1616, DN2E km 2

Jud. Suceava, RO-727020

office@tehnoworld.ro

www.tehnoworld.ro

DATA SHEET
GAS POLYETHYLENE PIPE PE 100

1. Production

Product: High density polyethylene pipe for gas.

HDPE pipe manufacture shall conform to the following normative:

1	Appearance	complied	EN 1555-1/2.
2	Dimensions	complied	
3	Melt flow index (MFR)	complied	
4	Oxidation induction time at 200 ° C	complied	
5	Traction	complied	
6	Hydrostatic resistance	complied	

The pipes are manufactured by extrusion, they are black with yellow stripes on generators formed by coextrusion of the same raw material as the pipe, have internal and external surfaces of the pipe clean, smooth without scratches, roughness, burr, deformations or inclusions of foreign bodies without pores or other defects. Cuts at the ends of the pipes are straight, without ridges or bumps. The products manufactured by SC TEHNO WORLD SRL in Romania are certified with Technical Agreement.

1. Raw material

The raw material used in the production process is high density polyethylene (HDPE), provided in pearls composition have to EN 1555-1.

The raw material used in the production process of the SC TECHNO WORLD SRL is 100% virgin material and is produced by established companies in the field.

Manufacturer	PE type	PE code
BOREALIS	PE100	BORSAFE HE 3490-LS
SABIC	PE100	P6006 VESTOLEN A 6060R 1000

2. Dimensional pipe range:

DN	SDR 11	SDR 17	SDR 17,6
Øext mm	e mm	e mm	e mm
20	3.0	2.3	2.3
32	3.0	2.3	2.3
40	3.7	2.4	2.3
50	4.6	3.0	2.9
63	5.8	3.8	3.6
75	6.8	4.5	4.3
90	8.2	5.4	5.2
110	10.0	6.6	6.3
125	11.4	7.4	7.1
140	12.7	8.3	8.0
160	14.6	9.5	9.1
180	16.4	10.7	10.3
200	18.2	11.9	11.4
225	20.5	13.4	12.8
250	22.7	14.8	14.2
280	25.4	16.6	15.9
315	28.6	18.7	17.9
355	32.2	21.1	20.2
400	36.3	23.7	22.8
450	40.9	26.7	25.6
500	45.4	29.7	28.4
560	50.8	33.2	31.9
630	57.2	37.4	35.8

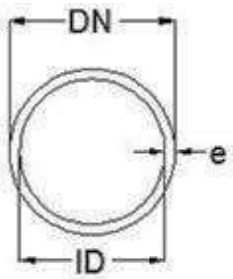

2. Marking:

Pipe marking is done every meter in accordance with EN 1555

CHARACTER	MARKING OR SIMBOL
Manufacturer:	TEHNOWORLD (TW)
Normative references:	SR EN 1555
Fluid circulation:	GAS
Dimensions:	DN X e
Material :	PE 100
SDR	SDR11/SDR 17/SDR 17.6
Batch production :	XXX
Reference standard :	EN 1555

Pipe marking is done with visible light paint color (yellow) in along the generating, so do not delete on transport and handling.

3. Packing

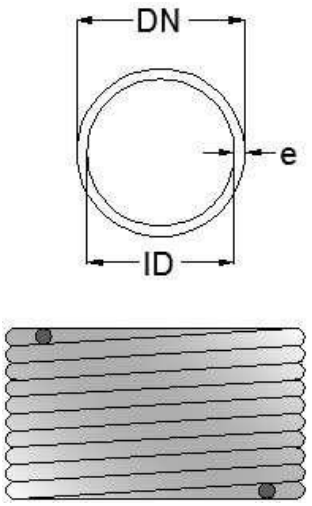

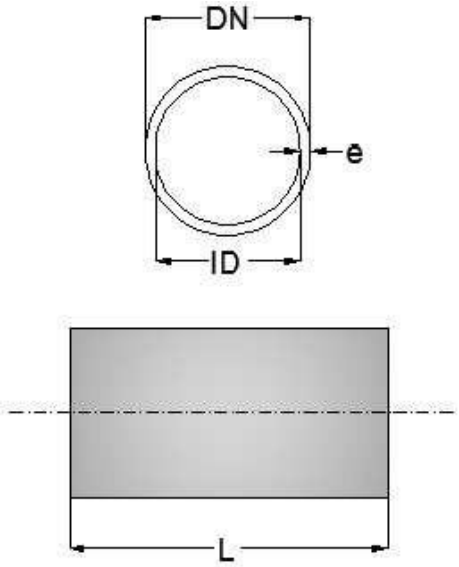

Coils x 100ml

(DN20÷DN110)

Bars x 12ml

(DN110÷DN630)

* - On request we can provide other dimensions of bars / coils

* - bars are protected with protective caps;

4. Handling:

All pipes (bars and/or coils) must be handled with extreme attention given the following rules to prevent damage to the surface.

-lifts use for transport related bars or bars packed in wooden racks

- do not use chains or cables, handling or connecting pipes

-when using ropes or straps to handling the pipes, they will be clean, no sand, rocks or other hard materials which, in contact with the pipe, can be damaged. It utilizes textile width 10 mm;

- avoid areas with rough edges rubbing tubes, which can deteriorate the external surface;

-lift arms must support the pipe as close to the center of gravity, thereby avoiding the fall and / or dangerous situations for operators;

- handling and loading devices (elevators) have parts in contact with the pipe, wood and protected with polyethylene;

- when transportation is by lifts or tubes in bars or coils should be avoided fast starts and great speed, which can cause imbalance pipes, their consequence being fall, causing external damage to the surface and causing dangerous situations for operators.

5. Storage:

In choosing solutions for storage must consider the UV radiation.
Stacking or bars, either coils, flat surfaces must be made using support (generally prefer wooden supports, sand or sawdust bed), clean, free and without sharp parts contain substances that could attack polyethylene.
Stacking area should be free of sharp stones.
The maximum time allowed, the black polyethylene pipes can be stored outdoors and exposed to sunlight without protection is 24 months from date of production.
When the pipes are stored in the open air for extended periods , it is recommended to be protected from direct sunlight.

6. Quality system:

SC TehnoWorld SRL has implemented an effective quality management system according to ISO 9001, Environmental Management ISO 14001and occupational health and safety management ISO 45001.

7. Lifetime:

The lifetime of the pipes depends largely on the pressure and temperature. For use at 20 ° C, minimum lifetime is estimated at 50 years, respecting the rules of laying and operating according to the manufacturer.

8. Documents accompanying products:

Delivered products will be accompanied by all documents related to their quality, in accordance with the law: delivery note, invoice, declaration of conformity, quality certificates and any other documents required in the specifications.

SC TEHNOWORLD SRL